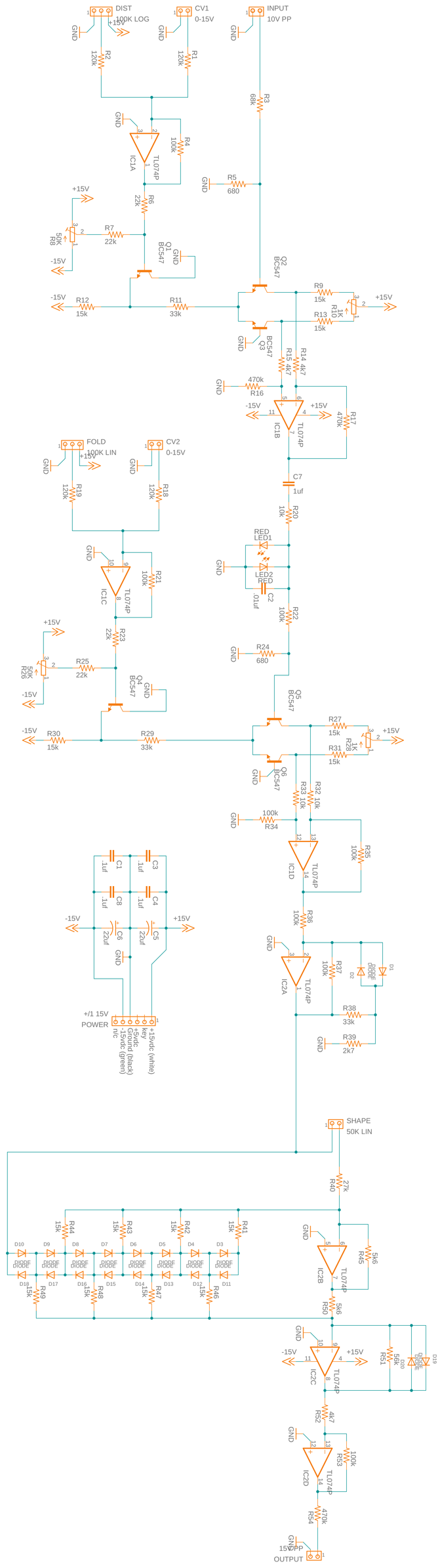
DIST
100K LOG
CV1
0-15V
INPUT
10V PP
FOLD
100K LIN
CV2
0-15V
SHAPE
50K LIN
+/1 15V
POWER
OUTPUT
IC1A
IC1B
IC1C
IC1D
IC2A
IC2B
IC2C
IC2D
TL074P
Q1
Q2
Q3
Q4
Q5
Q6
BC547
LED1
LED2
RED
GND
+15V
-15V